Model 101B(b1)
Flush Diaphragm Pressure Sensors

Description

The model 101B(b1) is a pressure sensor featuring a flush diaphragm and based on BCM's piezoresistive silicon sensor die. The sensor die is packaged in a stainless steel housing where oil is filled. Through the filling oil, measured pressure can be transferred from a stainless steel diaphragm to the sensor die.

Due to the flush diaphragm, the 101B(b1) features is able to measure pressure of either viscous fluids or media containing solids. The measured media can be corrosive which are compatible to 316L stainless steel.

The sensor can be sealed by either welding or an O-ring. The 101B(b1) has its wetted parts with G1/2 threads and its connection for an electronics housing with M25x1 male threads as standard. Other thread types are available on request.

101B(b1)

Features

- pressure types & ranges:
  gauge: 0.2, ..., 35 bar
  absolute: 1, ..., 35 bar
  sealed gauge: 35, ..., 100 bar
- full-welded construction
- no O-ring inside the housing
- either with or without temperature compensation
- outstanding reliability
- excited by either current or voltage

Applications

- process control systems
- liquid level control
- pneumatic and hydraulic controls
- biomedical instruments
- ship and marine systems
- aircraft and avionic systems

Environmental Specifications

- position effect: < 0.1% of zero offset shift in any direction
- vibration effect: no change at 10 g (RMS), 20~2000 Hz
- shock: 100 g, for 10 millisecond

Dimensions

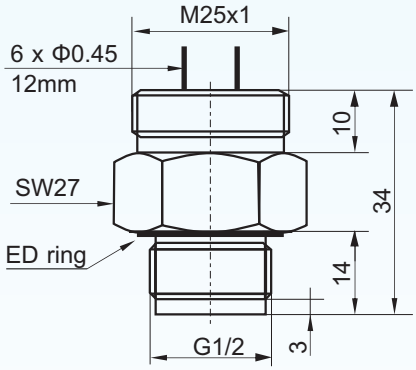

101B(b1)

Notes:

1. All dimensions are in mm.
2. Standard mechanical interface is G1/2 and M20x1.5 threads. Other thread types are available on request. In such a case, there might be some modifications in the other dimensions of the sensor. Contact BCM SENSOR to have more information.

BCM SENSOR TECHNOLOGIES BVBA

Industriepark Zone 4, Brechtsebaan 2
B-2900 Schoten - Antwerpen, BELGIUM

Tel.: +32-3-238 6469
Fax: +32-3-238 4171

website: www.bcmsensor.com
email: sales@bcmsensor.com

Model 101B(b1)
Flush Diaphragm Pressure Sensors

BCM SENSOR

Technical Data

Parameter		Units	Specifications	Notes
pressure medium			viscous fluid or media containing solids	1
pressure references & ranges	gauge	bar	0~0.2, ~0.35, ~0.7, ~1, ~2, ~3.5, ~7, ~10, ~20, ~35	2
	absolute	bar	0~0.7, ~1, ~2, ~3.5, ~7, ~10, ~20, ~35	
	sealed gauge	bar	0~35, ~70, ~100	
overload pressure		%fs	200	3
full scale output (fso)		mV	≥ 60, option: 10%~90%Vs ratiometric, 4~20mA, I^2C, SPI	4 & 5
excitation	voltage	Vdc	5 (max. 10)	
	current	mA	1 (max. 2)	
zero offset		mV	⩽ ±2	5
accuracy		%fs	⩽ ±0.25, ⩽ ±0.5 (standard)	6
long-term stability		%fs/year	⩽ ±0.2	
input resistance		kΩ	3.5~6	
output resistance		kΩ	3.5~6	
insulation resistance		MΩ	500 @100Vdc	
compensated temperature range		°C	0~70	
operating temperature range		°C	-40 ~ +125	
storage temperature range		°C	-40 ~ +125	
temperature coefficient of zero offset		%fso/°C	⩽ ±0.03	7
temperature coefficient of span		%fso/°C	⩽ ±0.03	7
life time		cycles	10^8	
response time		ms	⩽ 1	8
mechanical interface			G1/2 male	
electrical interface			4 colored flying wires, PVC, 100mm (standard)	
			4 conductor flat-cable, 100mm	
			6 gold-plated copper pins, Φ0.45mm, 12mm	
housing connection			M25x1 male	
pressure diaphragm			316L SS	
wetted parts material			316L SS	
filling oil			silicone oil	
net weight		gram	~131	

General conditions for measurements: media temp. = 25°C ±1°C, ambient temp. = 25°C ±1°C, humidity = 50%RH ±10%RH, barometric pressure: 86~106 kPa, vibration = 0.1 g (1m/s/s) max.

Notes:
1. The pressure medium should be compatible with wetted parts material and pressure diaphragm.
2. For customized pressure ranges, consult BCM.
3. “fs” refers to full scale pressure or rated pressure.
4. Measured at full scale pressure.
5. Measured at 5Vdc excitation.
6. Accuracy = sqrt (non-linearity^2 + hysteresis^2 + repeatability^2).
7. Calculated as a rate of output change between 25°C and 70°C, and normalized by the output at 25°C, when the sensor is not temperature compensated.
8. Response time for a 0 bar to fs step change, 10% to 90% rise time.

The listed specifications and dimensions are subject to change without prior notice.

BCM SENSOR TECHNOLOGIES BVBA

Industriepark Zone 4, Brechtsebaan 2
B-2900 Schoten - Antwerpen, BELGIUM

Tel.: +32-3-238 6469
Fax: +32-3-238 4171

website: www.bcmsensor.com
email: sales@bcmsensor.com

Model 101B(b1)
Flush Diaphragm Pressure Sensors

Electronic Interface

6 gold-plated copper pins or 4 wires

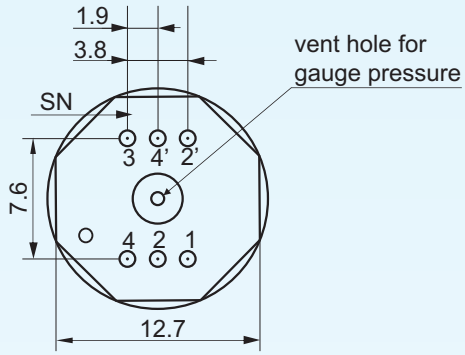

pin	connection	wire color
1	signal +	yellow
2	excitation +	red
3	excitation -	black
4	signal -	blue
2'	no function	no wire
4'	no function	no wire

Notes: In case of alterations, refer to the label on the package.

BCM SENSOR TECHNOLOGIES BVBA

Industriepark Zone 4, Brechtsebaan 2
B-2900 Schoten - Antwerpen, BELGIUM

Tel.: +32-3-238 6469
Fax: +32-3-238 4171

website: www.bcmsensor.com
email: sales@bcmsensor.com

Model 101B(b1)
Flush Diaphragm Pressure Sensors

BCM SENSOR

Ordering Information

position (pos.) 1: model

101B(b1)

pos. 2: pressure ranges and references

0.2bar	G	3.5bar	G, A	70bar	S
0.35bar	G	7bar	G, A	100bar	S
0.7bar	G, A	10bar	G, A		
1bar	G, A	20bar	G, A		
2bar	G, A	35bar	G, A, S		

G: gauge pressure
A: absolute pressure
S: sealed gauge

pos. 3: output signal

60mV (standard) 10%/90%Vs 4/20mA I^2C SPI

pos. 4: accuracy

0.25%fs 0.5%fs (standard)

pos. 5: compensation

T1 = 0~70°C (standard)
NT = no temperature compensation

pos. 6: mechanical interface

G1/2 = G1/2 male threads other thread types available on request

pos. 7: housing connection

M25x1 = M25x1 male threads
other thread types available on request

pos. 8: electrical interface

4F = 4 colored flying PVC wires, 100mm (standard)
4C = 4 conductor flat-cable, 100mm
6P = 6 gold-plated copper pins, 13mm
If the required output signal is not mV, the electrical interface will be adjusted as the way confirmed on request.

pos. 9: excitation

v = 5Vdc (standard) c = 1.5mA

pos. 10: customized specifications

"(*)" is necessary only if any customized parameter is required, otherwise it is neglectable.

pos.1	pos. 2	pos. 3	pos. 4	pos. 5	pos. 6	pos. 7	pos. 8	pos. 9	pos. 10

.

Examples of Ordering Code

- standard sensor:

  101B(b1)-3.5barG-60mV-0.5%fs-T1-G1/2-M25x1-4F-v

- customized sensor:

  101B(b1)-3.5barG-10%/90%Vs-0.5%fs-T1-G1/2-M25x1-3F-v

  (*): - Customized output signal = 10%~90%Vs ratiometric
  - Electrical interface = 3 colored flying wire.

BCM SENSOR TECHNOLOGIES BVBA

CERTIFIED ISO 9001:2008

Industriepark Zone 4, Brechtsebaan 2
B-2900 Schoten - Antwerpen, BELGIUM

Tel.: +32-3-238 6469
Fax: +32-3-238 4171

website: www.bcmsensor.com
email: sales@bcmsensor.com