Model 166V
Single Point Load Cells

Features

- parallel bending beam
- low profile
- capacity: 3, …, 30 kg
- accuracy: 0.05 %fs
- max. platform size: 300 X 300 mm
- aluminum construction with surface anodized
- environment protection class: IP 65

Applications

- kitchen scales
- postage scales
- portable scales

Description

The "single point" load cells are made of parallel bending beam working principle. Only one unit is sufficient to build up a scale. These load cells are moment insensitive. That is, when installed in a platform scale, it reads the same regardless of the position of the load applied to the upper platform.

Model 166V load cells are designed to this "single point" type. 166V load cells are manufactured from high quality aluminum alloy of aviation standard. 166V load cells can measure loads ranging from 3 kg to 30 kg with the measuring accuracy of 0.05%fs (fs = full scale).

166V load cells are widely used to manufacture postage scales, kitchen scales, portable scales and other platform scales.

Dimensions

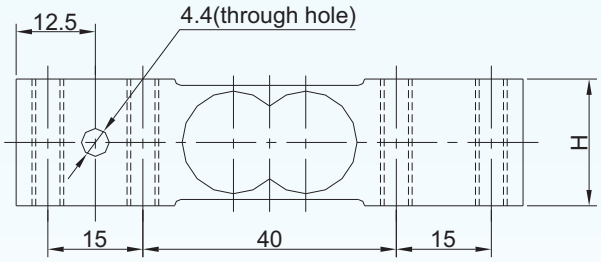

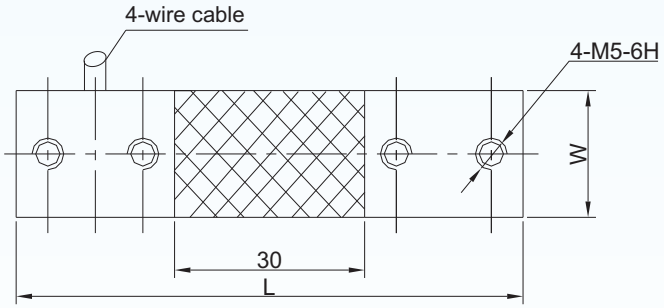

capacity (kg)	H	W	L	platform
2.5,5	20	20	80	150x150 mm
10,20,30	22	30	80	200x200 mm

BCM SENSOR TECHNOLOGIES BVBA

Industriepark Zone 4, Brechtsebaan 2
B-2900 Schoten - Antwerpen, BELGIUM

Tel.: +32-3-238 6469
Fax: +32-3-238 4171

website: www.bcmsensor.com
email: sales@bcmsensor.com

Model 166V
Single Point Load Cells

Technical Data

parameters	units	specifications
capacity	kg (or t)	3, 5, 7, 10, 20, 30
safe load limit	%fs	120
ultimate overload	%fs	150
output sensitivity at fs	mV/V	≥ 1.85 (typically 2mV/V)
zero unbalance	%fso	± 1.5
non-linearity	%fs	± 0.05
hysteresis	%fs	± 0.05
repeatability	%fs	± 0.05
creep error (30 min.)	%fs	± 0.03
excitation (supply voltage)	Vdc	5, ..., 10
max. excitation voltage	Vdc	15
input resistance	Ω	380 ± 20 (standard), 1050 ± 10
output resistance	Ω	350 ± 5 (standard), 1000 ± 10
insulation resistance	MΩ	≥ 2000@50 Vdc
storage temp. range	°C	-35 ~ +80
operating temp. range	°C	-20 ~ +50
compensated temp. range	°C	-10 ~ +40
temp. coefficient of ZERO	%fs/°C	± 0.003
temp. coefficient of SPAN	%fs/°C	± 0.003
load cell body material		aluminum alloy
sealing		potted
mechanical interface		refer to the dimensions on the datasheets
electrical interface		Φ3.8 mm, 4-conductor shielded, PVC jacket, 0.45 m length
environment protection		IP 65
unit weight	g	70 g

The listed specifications are subject to change without prior notice.

Electrical connection

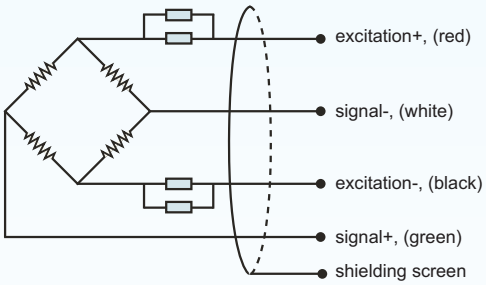

BCM SENSOR TECHNOLOGIES BVBA

Industriepark Zone 4, Brechtsebaan 2
B-2900 Schoten - Antwerpen, BELGIUM

Tel.: +32-3-238 6469
Fax: +32-3-238 4171

website: www.bcmsensor.com
email: sales@bcmsensor.com

Model 166V
Single Point Load Cells

Ordering Information

position (pos.) 1: model

166V: made from aluminum alloy

pos. 2: capacities

3 kg, 5 kg, 7 kg, 10 kg, 20 kg, 30 kg

pos. 3: output sensitivity

2 mV/V

pos. 4: non-linearity or accuracy class

0.05 %fs

pos. 5: bridge resistance

350 Ω (Rin = 380±20Ω, Rout = 350±5 Ω), standard
1000 Ω (Rin = 1050±10Ω, Rout = 1000±10 Ω)

pos. 6: threads (live end/fixed end)

2xM5/2xM5 : two M5 threads at the live end, two M5 threads at the fixed end

pos. 7: electrical interface

cable, code = diameter(Φ)/number of conductors/cable jacket/cable length
3.8/4/PVC/0.45 = Φ3.8 mm, 4-conductors shielded, PVC, length = 0.45* m

pos. 8: environment protection

IP 65

pos. 9: accessories for installation

NA**. In case of "NA", pos.9 can be omitted.

pos. 10: customized spec's

When any customized spec's are required, the customer needs to add "C" as the last parameter in the ordering code, and specifies the wished spec's on his order clearly.

The customized spec's needs to be confirmed in advance by BCM's sales representative.

Code "C" can be omitted if no customized spec's are required.

pos.1	pos. 2	pos. 3	pos. 4	pos. 5	pos. 6	pos. 7	pos. 8	pos. 9	pos. 10

*: This value can also be a customized value.
**: NA = not available or not applicable

example: 166V-20kg-2mV/V-0.05%fs-1000Ω-2xM5/2xM5-3.8/4/PVC/0.45-IP65-C

BCM SENSOR TECHNOLOGIES BVBA

Industriepark Zone 4, Brechtsebaan 2
B-2900 Schoten - Antwerpen, BELGIUM

Tel.: +32-3-238 6469
Fax: +32-3-238 4171

website: www.bcmsensor.com
email: sales@bcmsensor.com